# Instant Hot Water Dispensers

## The Next Necessity™

## H-HOT100™

The most affordable instant hot water dispenser with easy push-button activation and modern design




## Submittal Sheet

- **Hot Only** – Dispenses near-boiling water
- Includes 2/3-gallon hot water tank
- Easy to adjust temperature control
- Tool-free tank connections and dry start protection to ease installation
- 1-Year *We Come To You*® In-Home Limited Warranty*
- 115 volts, 750 watts, 6.25 amps
- Available in chrome and satin nickel

## Specifications

| | |
|---|---|
| Capacity | 2/3-gallon hot water tank dispenses near-boiling water |
| Electrical | 115 volts A.C., 750 watts, 6.25 amp heating element with grounded three (3) prong plug |
| Thermostat | Snap-action, adjustable thermostat |
| Insulation | Meets U.L. 94HF-1 flammability specification |
| Valve | Instant, self-closing |
| Recommended Supply Pressure | 30-125 psi |
| Shipping Weight | Approximately 7.4 lbs. |
| Required Hole Diameter | 1-1/4" – 1-1/2" standard sink hole |

Water Filtration System Available

## Dimensions

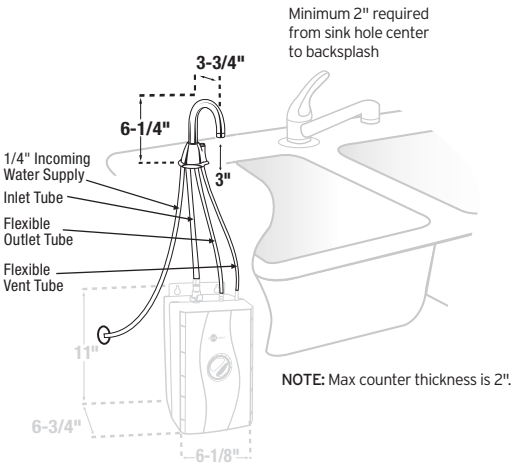


**NOTE:** Max counter thickness is 2".

## Sample Specification

Instant hot water dispenser(s) shall be InSinkErator Model H-HOT100™ with 2/3-gallon hot water tank, adjustable temperature and instant, self-closing hot valve.

**Warranty:**
1-year parts and in-home service.

* The complete InSinkErator warranty is included in the Care & Use booklet packed with each unit.

Pat. hppt://www.isepat.com

## Job Specifications

Complies with USA Lead Plumbing Law


USA
1-800-558-5700
www.insinkerator.com

Canada
1-800-558-5700
www.insinkerator.ca



InSinkErator may make improvements and/or changes in the specifications at any time, in its sole discretion, without notice or obligation and further reserves the right to change or discontinue models.

©2017 InSinkErator, a business unit of Emerson Electric Co. All Rights Reserved.



HWD498-17E-83-10

Printed in USA